CNENGR 116
Fundamentals of Digital Electronics

Lecture 3 – Binary Data Formats

Dr Zhongming Zhang

Zhongming.zhang@lancaster.ac.uk

School of Engineering

Lancaster University

Recap

- Course outline
- Basic logic gates
- Binary numbers

Examples

$$\overline{\overline{\overline{A}+B\overline{\overline{C}}}+D(\overline{E+\overline{\overline{F}}})}$$

Examples

$$\overline{\overline{A+B\overline{C}}+D(\overline{E+\overline{F}})}=(\overline{\overline{A+B\overline{C}}})(\overline{D(\overline{E+\overline{F}})})$$

$$=(A+B\overline{C})(\overline{D(\overline{E+\overline{F}})})$$

$$=(A+B\overline{C})(\overline{D}+(\overline{\overline{E+\overline{F}}}))$$

$$=(A+B\overline{C})(\overline{D}+E+\overline{F})$$

Objectives

- Understand base eight and sixteen
- Encode information to binary numbers
- Serial and parallel data transmission

Recommended reading activity

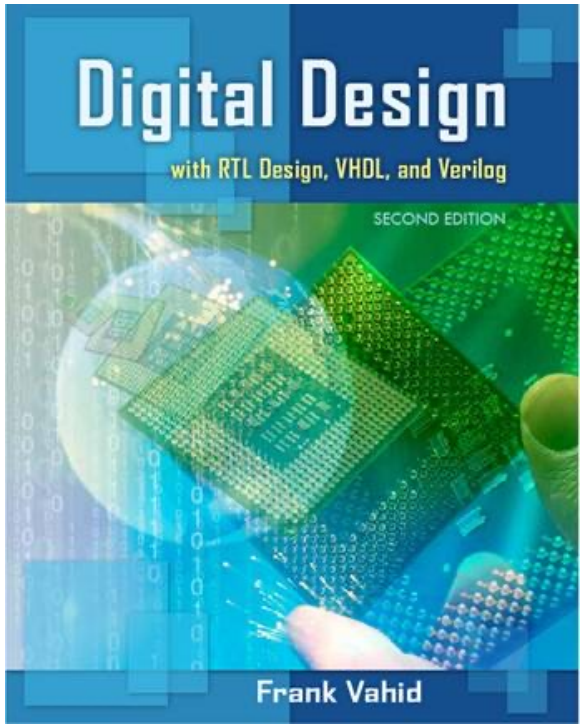

Chapter 1

- Sec 1.1
- Sec 1.2

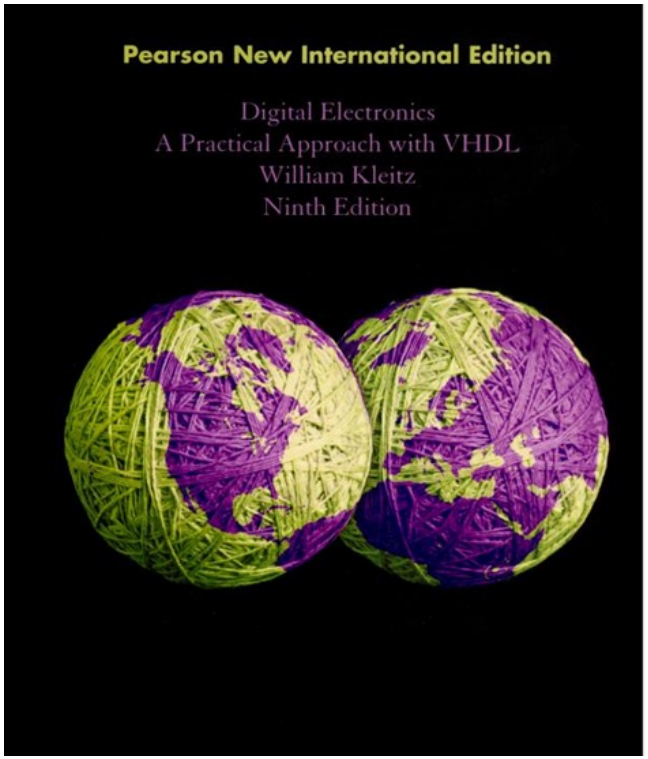

Chapter 1 **Chapter 2**

- Sec 2, 3

1. Numbering Systems

- Base Sixteen (Hexadecimal)
  - In base 16 we have sixteen digits 0-9, and A, B, C, D, E, F
  - More than F -- next position
  - In base 16 each position is a power of 16
  - Each position in base two represents four positions in base two
  - Example: X = $(8AF)_{16} = (2223)_{10} = (100010101111)_2$

$$\frac{8}{16^2}\ \frac{A}{16^1}\ \frac{F}{16^0}$$

$$\begin{array}{ccc} 8 & A & F \\ \downarrow & \downarrow & \downarrow \\ \boxed{1000} & \boxed{1010} & \boxed{1111} \end{array}$$

1.1. A Quick Exercise

- Convert the following numbers into the requested numbering system

  - $(A01)_{16} = (???)_2$

A	0	1
1010	0000	0001

  - $(11110000)_2 = (???)_{16}$

1111	0000
F	0

hex	binary
0	0000
1	0001
2	0010
3	0011
4	0100
5	0101
6	0110
7	0111

hex	binary
8	1000
9	1001
A	1010
B	1011
C	1100
D	1101
E	1110
F	1111

1.2. Base Sixteen

- Decimal to Hex
  - $(99)_{10} = (???)_{16}$

Step 1: First convert decimal to binary:

0	1	1	0	0	0	1	1
128	64	32	16	8	4	2	1

Step 2: Then convert the binary to hex:

6 3

(Quick check: $6\times16 + 3\times1 = 96+3 = 99$)

- The usual method of division also works as always

1.3. RFID Tag - A Practical Example

- What is a more compact way of writing the Tag ID?

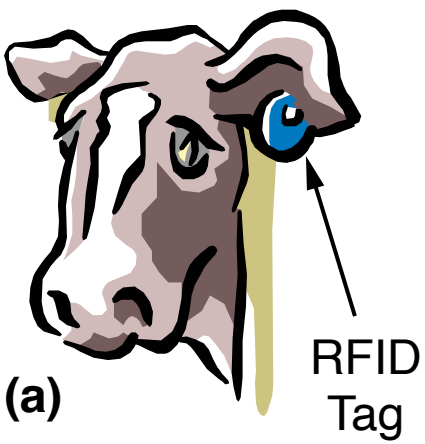

(b)	8-bit Province #	8-bit City #	16-bit Animal #
(c)	Province: 7	City: 160	Animal: 513
(d)	00000111	10100000	00000010 00000001
(e)	07	A0	02 01
(f)	**Tag ID in hex: 07A00201**		

Decimal

Binary

Hex

What about base eight?

- Batteryless tag powered by radio field
- Transmits unique 32-bit identification number

Class exercise

- Covert $(2037)_{10}$ to base 2, base 8 and base 16

2^{11}	2^{10}	2^9	2^8	2^7	2^6	2^5	2^4	2^3	2^2	2^1	2^0
2048	1024	512	256	128	64	32	16	8	4	2	1

- $2037 - 1024 = 1013$
- $1013 - 512 = 501$
- $501 - 256 = 245$
- $245 - 128 = 117$
- $117 - 64 = 53$
- $53 - 32 = 21$
- $21 - 16 = 5$
- $5 - 4 = 1$
- $1 - 1 = 0$

Binary

2^{11}	2^{10}	2^9	2^8	2^7	2^6	2^5	2^4	2^3	2^2	2^1	2^0
0	1	1	1	1	1	1	1	0	1	0	1

Class exercise

- Covert $(2037)_{10}$ to base 2, base 8 and base 16

2^{11}	2^{10}	2^{9}	2^{8}	2^{7}	2^{6}	2^{5}	2^{4}	2^{3}	2^{2}	2^{1}	2^{0}
2048	1024	512	256	128	64	32	16	8	4	2	1

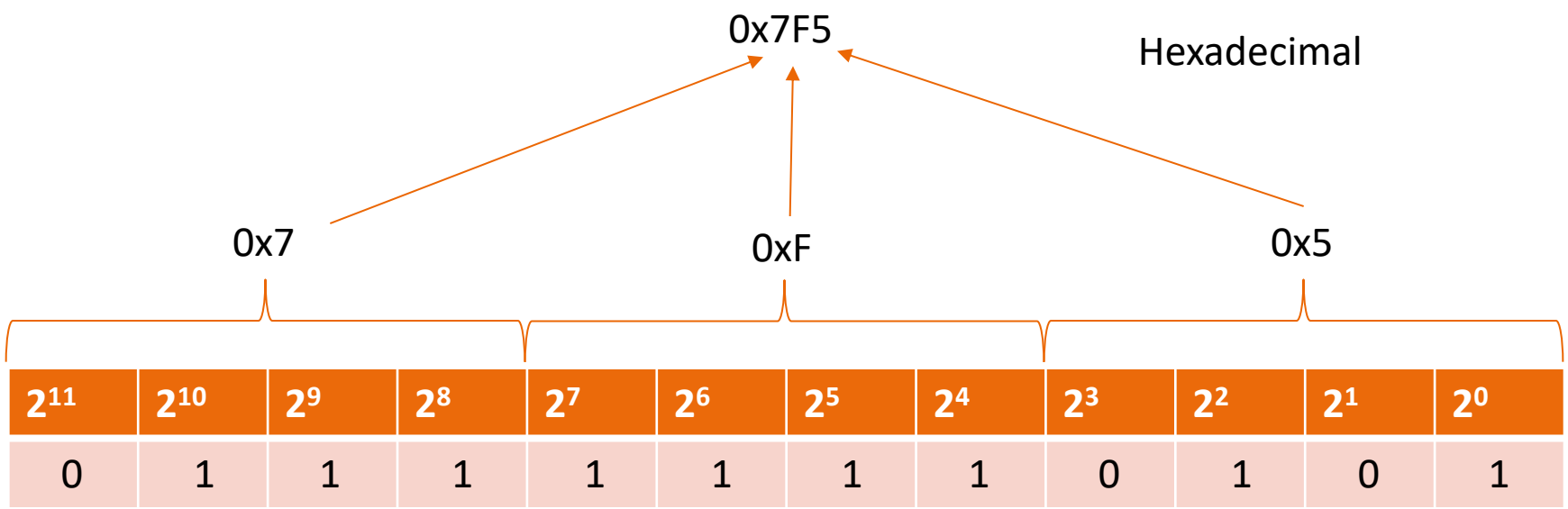

Class exercise

- Covert $(2037)_{10}$ to base 2, base 8 and base 16

2^{11}	2^{10}	2^{9}	2^{8}	2^{7}	2^{6}	2^{5}	2^{4}	2^{3}	2^{2}	2^{1}	2^{0}
2048	1024	512	256	128	64	32	16	8	4	2	1

3765

Octal

3 7 6 5

2^{11}	2^{10}	2^{9}	2^{8}	2^{7}	2^{6}	2^{5}	2^{4}	2^{3}	2^{2}	2^{1}	2^{0}
0	1	1	1	1	1	1	1	0	1	0	1

2. Encoding Data as Binary Numbers

- Some data are inherently binary such as pressing a button
  - not pressed (0), pressed (1)

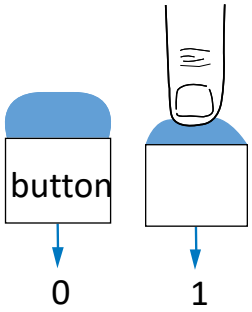

- Some data are inherently digital
  - It is just necessary to encode them as binary
  - E.g. multi-button input: encode red=001, blue=010, ...

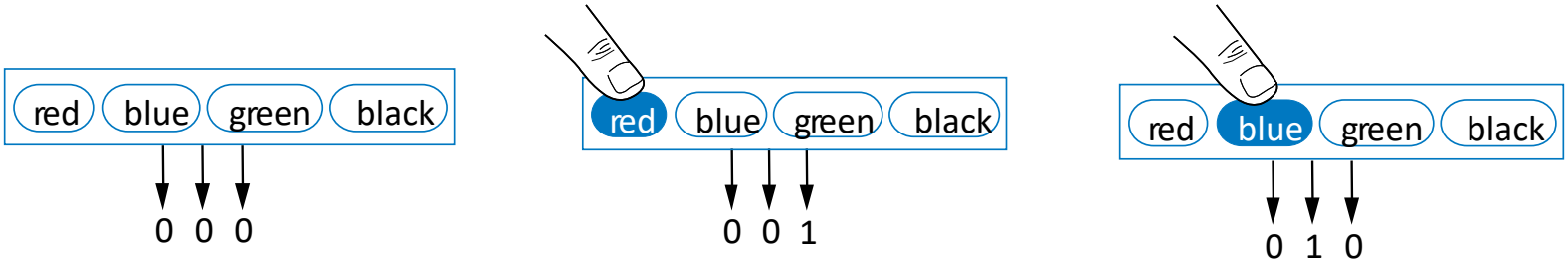

2.1. Encoding a Digital Phenomenon

- How many decimal number can be represented by a 3-bit string?

000 →	0	Red	A	
001 →	1	Green	B	
010 →	2	Blue	C	
011 →	3	White	D	
100 →	4	Violet	E	.....
101 →	5	Cyan	F	
110 →	6	Pink	G	
111 →	7	Black	H	

- In this case we say decimal numbers or any other symbols are encoded with binary numbers.

2.1. Encoding a Digital Phenomenon

- How many decimal number can be represented by an n–bit string?

$$D = 2^n$$

- How many bits are required to encode D different symbols?

$$\boxed{\log_a a^n = n}$$

$$n = \log_2 D$$

D = number of distinct symbols
n = number of bit

- What is the maximum decimal number can be represented by an n–bit string?

$$D = 2^n - 1$$

2.2. Encoding Data as BCD

- Decimal-to-BCD conversion
  - Binary-Coded-Decimal (BCD) numbering system is suitable for encoding only numeric data.
  - Convert each decimal digit to its 4-bit binary code.
  - Example: $(17)_{10} = (10111)_{BCD}$

$$\overset{1}{\boxed{0001}}\ \overset{7}{\boxed{0111}}$$

- To convert a BCD number to a decimal number you should reverse the process by making 4-bit groups from the right.

Decimal	Binary	Hex	Octal	BCD
17	0001 0001	11	21	0001 0111
20	0001 0100	14	24	0010 0000

2.3. Encoding Data as ASCII

- ASCII (American Standard Code for Information Interchange)
  - It is suitable for representing alphanumeric (letters, symbols, and numbers) data.
  - It uses 7 bits to represent all data.

Encoding	Symbol	Encoding	Symbol
100 0001	A	100 1110	N
100 0010	B	100 1111	O
100 0011	C	101 0000	P
100 0100	D	101 0001	Q
100 0101	E	101 0010	R
100 0110	F	101 0011	S
100 0111	G	101 0100	T
100 1000	H	101 0101	U
100 1001	I	101 0110	V
100 1010	J	101 0111	W
100 1011	K	101 1000	X
100 1100	L	101 1001	Y
100 1101	M	101 1010	Z

Encoding	Symbol	Encoding	Symbol
110 0001	a	010 0000	<space>?
110 0010	b	010 0001	!
...		010 0010	"
111 1001	y	010 0011	#
111 1010	z	010 0100	$
		010 0101	%
011 0000	0	010 0110	&
011 0001	1	010 0111	'
011 0010	2	010 1000	(
011 0011	3	010 1001	)
011 0100	4	010 1010	*
011 0101	5	010 1011	+
011 0110	6	010 1100	,
011 0111	7	010 1101	-
011 1000	8	010 1110	.
011 1001	9	010 1111	/

2.4. Thermometer - A Practical Example

- The system reads the temperature, outputs ASCII code:
  - “F” for freezing (0-32)
  - “B” for boiling (212 or more)
  - “N” for normal

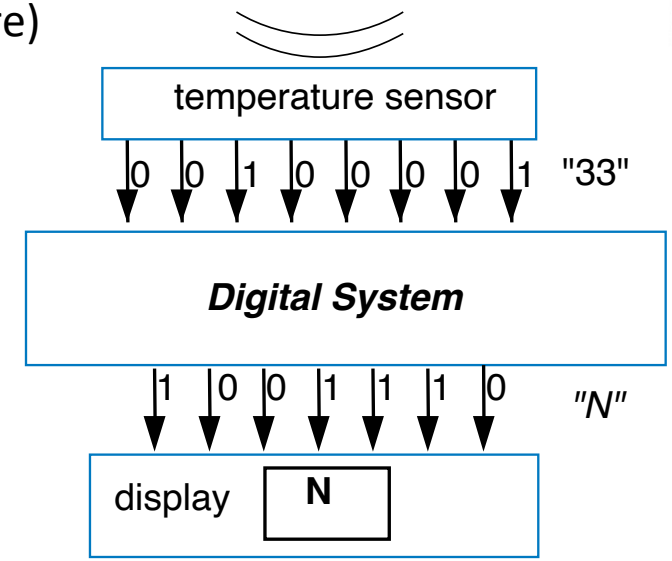

- Digital thermometer processes the binary inputs and generates the corresponding ASCII codes to the LCD display

2.5. Encoding Analogue Signals to Binary

ADC –Analogue to Digital Converter
DAC – Digital to Analogue Converter

- Analogue to Digital Conversion or A2D or **ADC** involves;
  - Sampling the signal at fixed time instants.
  - Dividing the y-axis to some specific levels and rounding the value of the signal to one of those levels.
  - Encoding the obtained values with binary numbers.

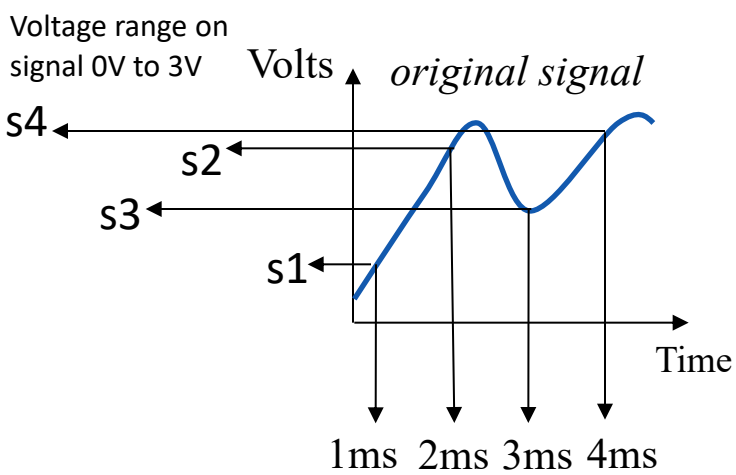

Let bit encoding be:

0 V: "00"
1 V: "01"
2 V: "10"
3 V: "11"

$$\log_2 4 = 2$$

s1 at 1ms ≈ 1v ∴ "01"
s2 at 2ms ≈ 3v ∴ "11"
s3 at 3ms ≈ 2v ∴ "10"
s4 at 4ms ≈ 3v ∴ "11"

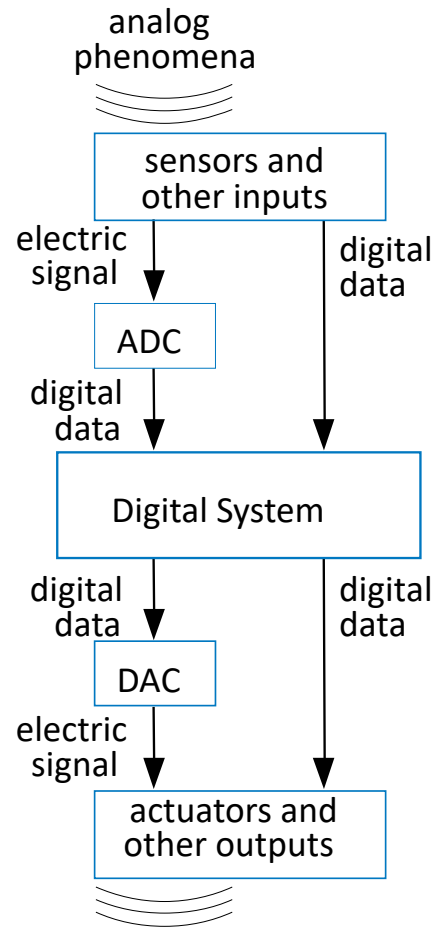

2.6. Compact Disc - A Practical Example

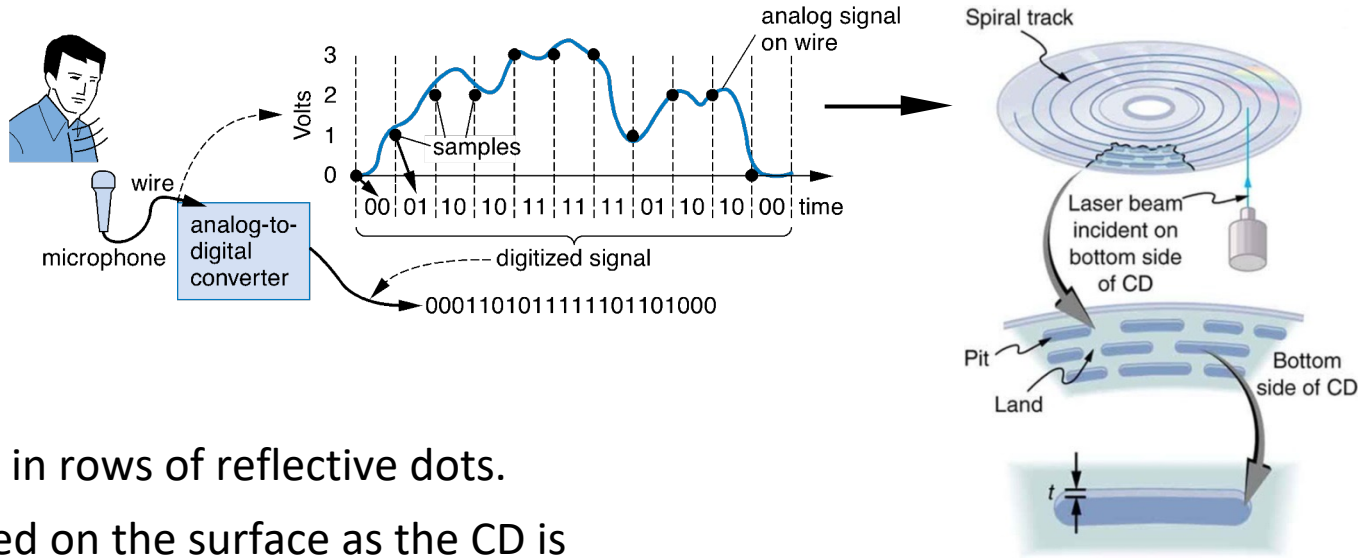

- Data is stored in rows of reflective dots.
- Laser is focused on the surface as the CD is spinning.
- When the change in reflected intensity is detected it is assigned state 1 and no change in reflection is assigned state 0.

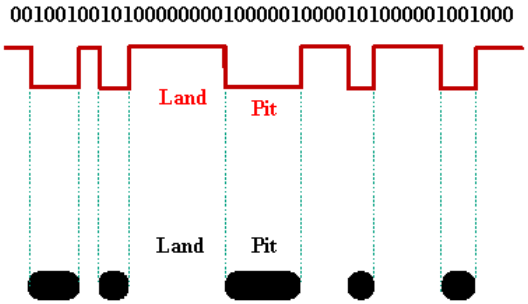

3. Serial Data Transmission

Note:	b = bit B = byte

- The following computer ports use serial communication to transmit the information
  - COM port with transmission rate 160 kbps
  - USB port with different versions (USB 1.0, 2.0, 3.0) and speeds in the range of hundred of Mbps
  - Ethernet port, transmission rate 100 Mbps

- **Inexpensive** but **slow** since only one bit is sent for each clock period

A **single** electrical conductor

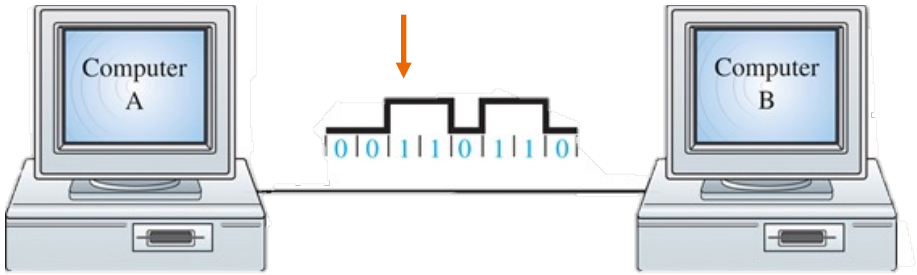

3.1. Timing diagram

- **Clock signal -** is a periodic signal that oscillate between high and low

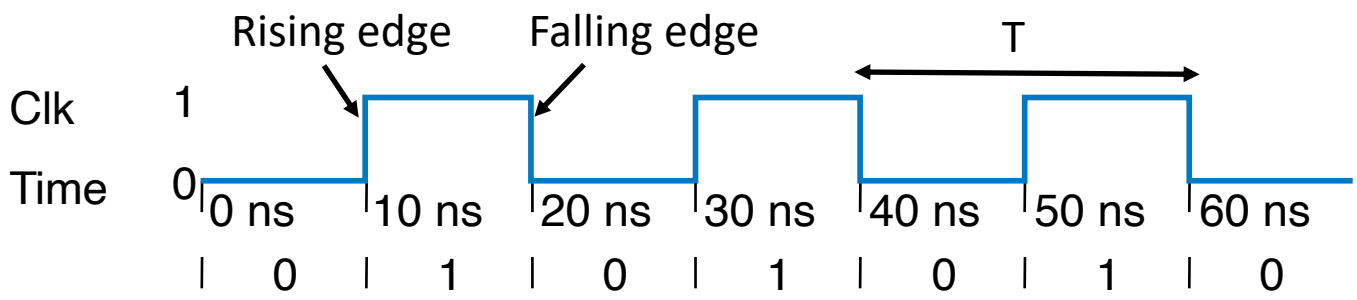

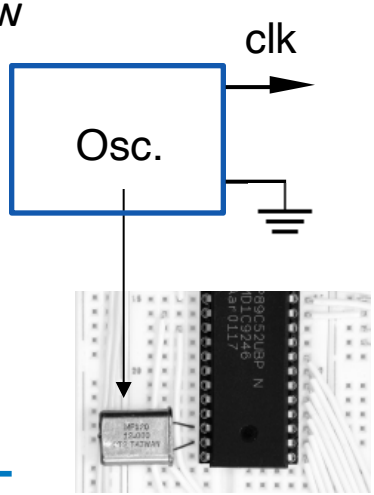

- **Timing Diagram -** plotting the binary digital signal in terms of the time

3.2. Serial Representation

- How a binary string 01101100 can be transmitted in a serial format?
  - One bit per clock period
  - Transmission starts from LSB
  - Bit-to-bit change occurs at the falling edge

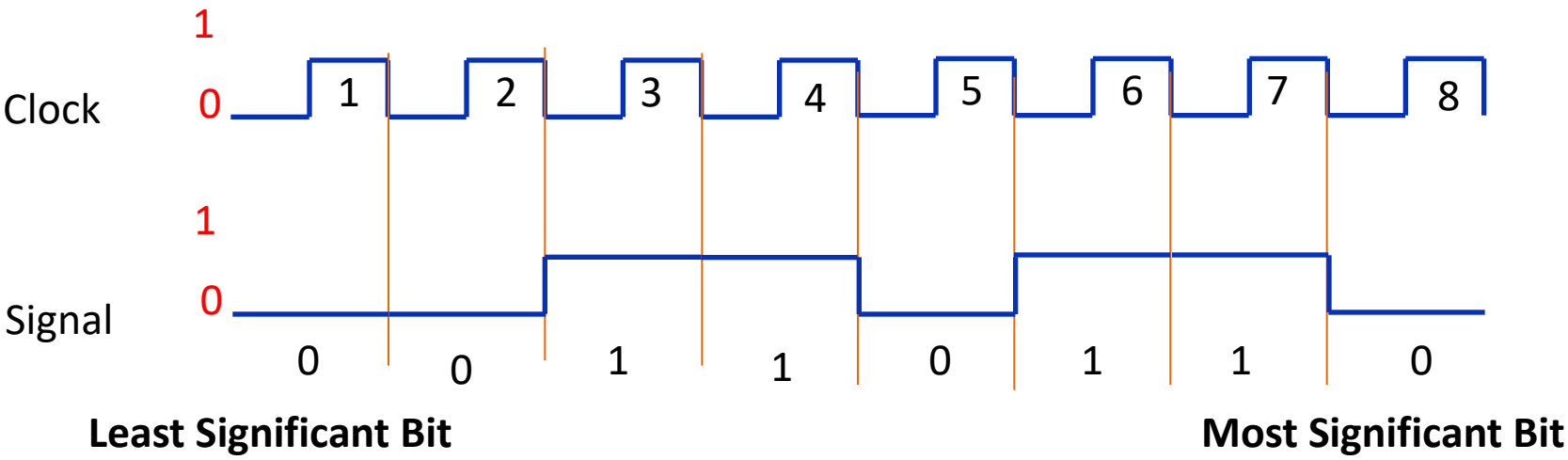

3.3. Parallel Data Transmission

Note: b = bit
B = byte

- The following computer ports use parallel communication to transmit the information
  - Printer port (LPT1) - 8 bit parallel, 115 kBps
  - Small Computer System Interface (SCSI) - 16 bit parallel, 320 MBps
  - PCI Data Bus - 32 bit parallel,133 MBps

"SKUZ-ee"

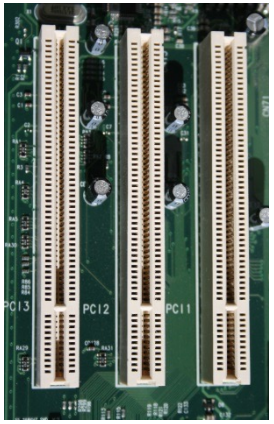

- **Expensive** but very **fast** as each bit is transmitted by a separate electrical conductor

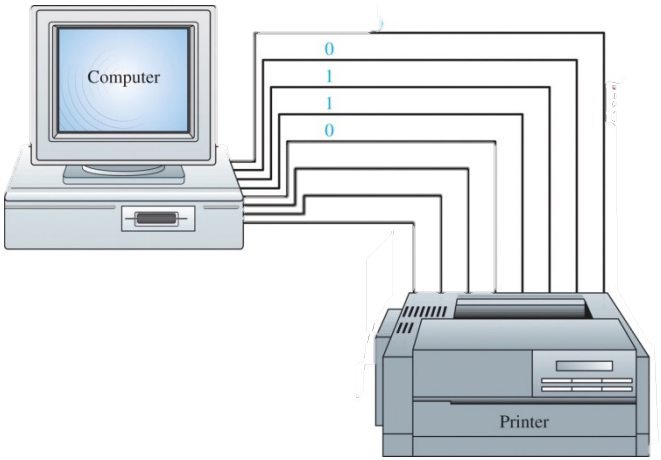

3.4. A Quick Exercise

- A) Sketch the serial and parallel representation of the decimal number 7 as a 4-bit number.

$(7)_{10} = (0111)_2$

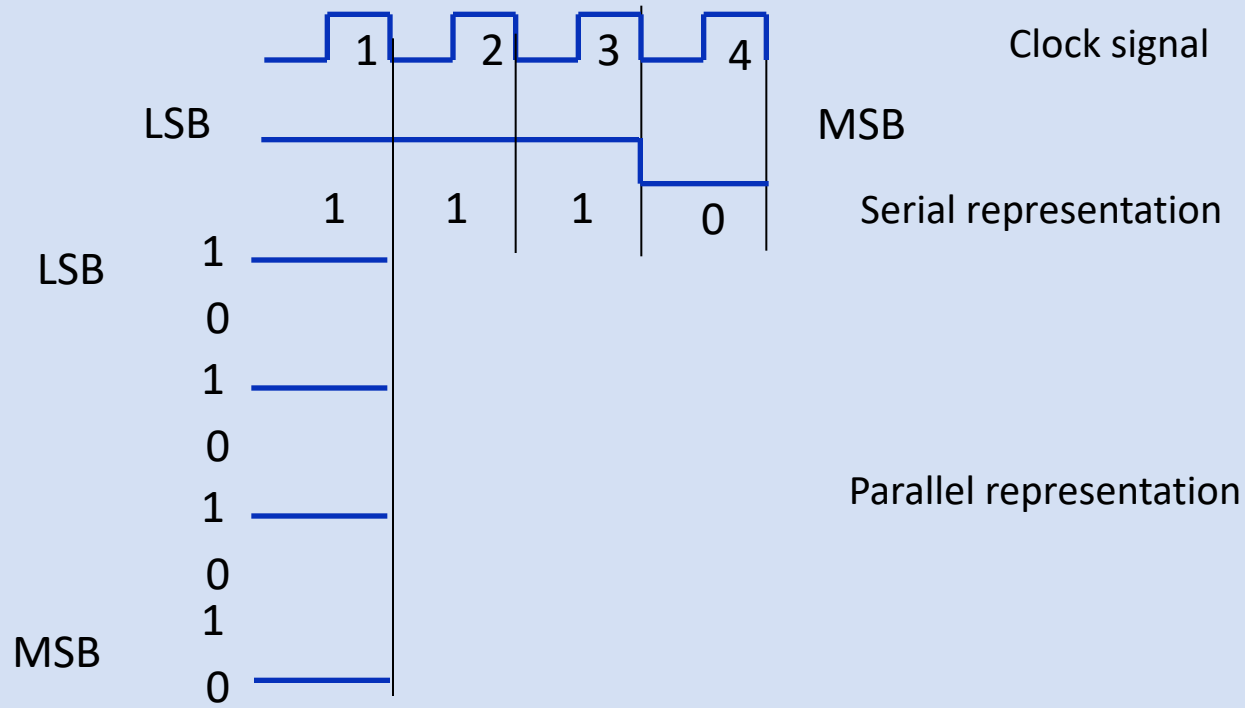

3.4. A Quick Exercise

- B) If the clock frequency is 5 MHz find the time necessary to transmit the number using each of the serial and parallel method.

T_{clock} = 1/f = 1/5 MHz = 0.2 µsec

$t_{parallel}$ = 1 clock cycle = 0.2 µsec

t_{serial} = 4 clock cycles = 4*0.2 µsec = 0.8 µsec

Summary

- Reviewing base two, eight, and sixteen
- Encoding numbers, characters and signals as binary numbers
- Reviewed several digital devices (RFID Tag, Ceiling fan, Digital thermometer, Compact Disc,…)
- Transmission of binary numbers using serial and parallel communication